240646 AIS35 G 3/8 F - G 3/8 M ADJUSTABLE CHEMICAL INJECTOR

ENTRATA INLET	USCITA OUTLET	Ø PORTAGOMMA HOSE BARB Ø	PESO WEIGHT	
G 3/8 F	G 3/8 M	10 mm ÷ 0,394 in	553 g	1

PRESSIONE NOMINALE / RATED PRESSURE	**31 MPa ÷ 4500 psi**
PRESSIONE AMMISSIBILE / PERMISSIBLE PRESSURE	**35 MPa ÷ 5075 psi**
TEMPERATURA NOMINALE / RATED TEMPERATURE	**90 °C ÷ 194 °F**

NOTE / NOTES

DA UTILIZZARE IN ABBINATA CON IL KIT UGELLI PER AIS35
TO BE USED IN COMBINATION WITH THE AIS35 NOZZLE KIT

MISURE DI INGOMBRO
OVERALL DIMENSIONS

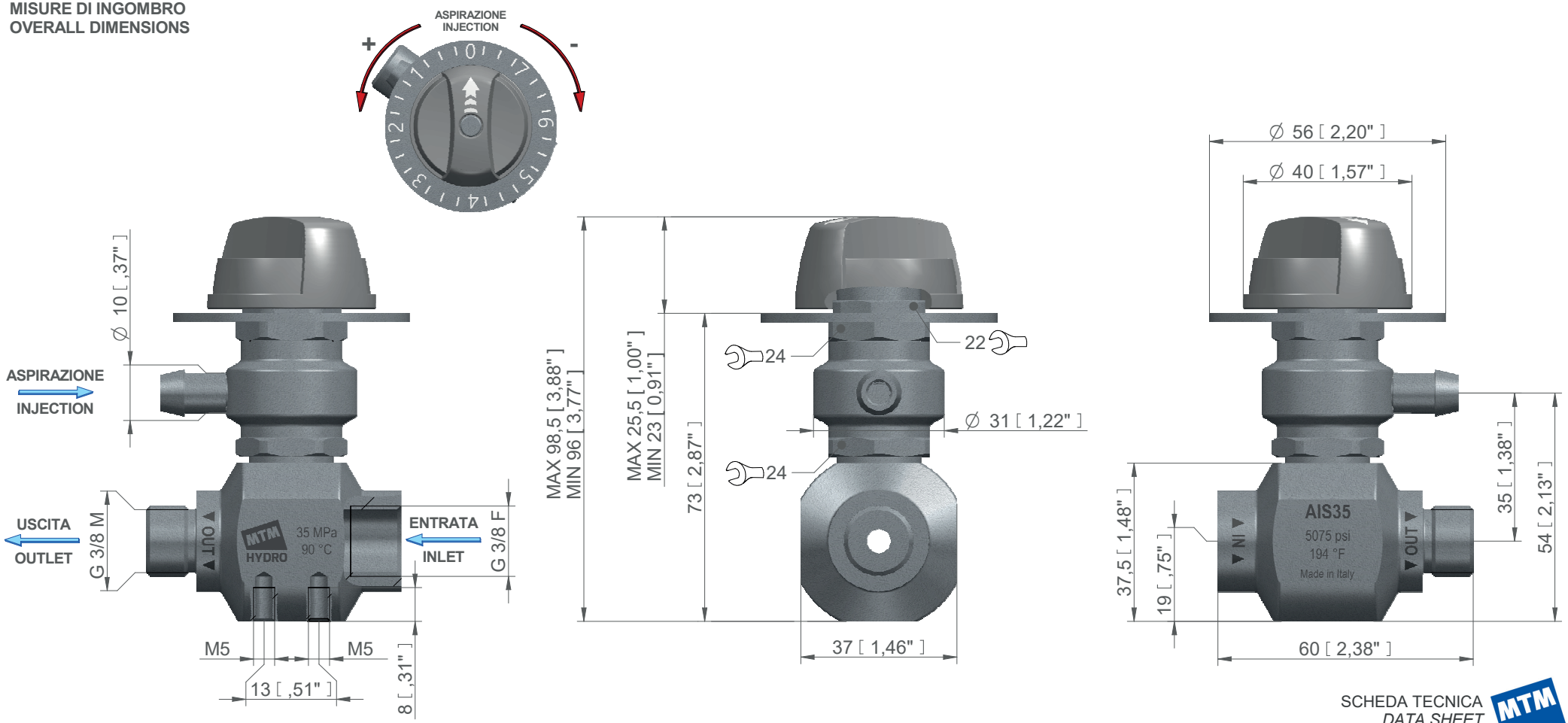

AGGIORNAMENTO
UPDATING 04/03/2024

SCHEDA TECNICA
DATA SHEET

MTM HYDRO