P.A. – S.p.A. – EQUIPAGGIAMENTI TECNICI DEL LAVAGGIO
VIA MILANO, 13 – CASELLA POSTALE 115 – 42048 RUBIERA (REGGIO EMILIA) – ITALY
Tel. +39 0522 623611 – Fax. +39 0522 629600 – R.E.A. RE 156319 – R.I. RE11535 – Mecc. RE 013446
C.F. e P. IVA 01035950359 – Cap. Soc. i.v. € 750.000,00 – Codice Identificativo C.E.E. IT 01035950359
ART. 2497 – BIS C.C. DIREZIONE E COORDINAMENTO BENETTI srl R.I. TRIB. DI RE 01480690351
Web: http://www.pa-etl.it – **E-mail:** info@pa-etl.it

RB 35 – Adjustable spray wash gun for Food Industry - 12 bar – 1.2 MPa

Technical manual : **E 141**

Low pressure gun suitable for pumps with rated pressure up to 12 bar – 1.2 Mpa

DN15

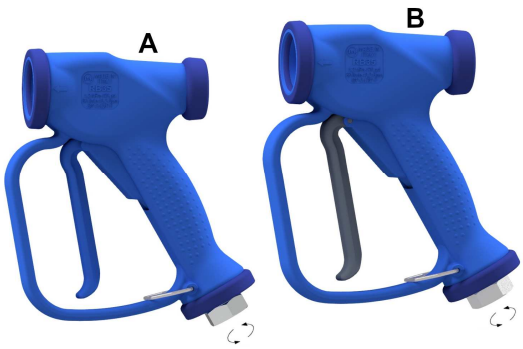

- **30.6200.00** RB35 w/SWIVEL G1/2 F - **A**
- **30.6250.00** RB35 w/SWIVEL G1/2 F - **B**

- Low pressure gun with body & housing in plastic material.
- Water jet width adjustable by the trigger.
  - Trigger completely drawn: pencil jet
  - Trigger released: 60° cone jet
- Plastic housing completely sealed.
- Shockproof protective rings in soft rubber.
- Inlet swivel.
- Lightweight.
- Reduced opening force.

TECHNICAL SPECIFICATIONS

P/N	BODY MATERIAL	PISTON MATERIAL	GASKET MATERIAL	MAX. FLOW		RATED PRESSURE		MAX.TEMPERATURE CONTINUOUS USE		WEIGHT		INLET
				l/min	*USGpm*	bar	*psi*	°C	*°F*	g	*lbs*	
30.6200.00	PP + GF	Brass	Viton	50	*13.2*	12	*175*	50	*120*	440	*0.97*	G 1/2" F
30.6250.00	PA + GF	Sst	EPDM	50	*13.2*	12	*175*	80	*175*	440	*0.97*	G 1/2" F

Using the gun at a water temperature higher than 60°C involves, for the operator, the use of adequate safety devices such as gloves, glasses, etc…

DIMENSIONAL DRAWING AND PRESSURE-FLOW CHART

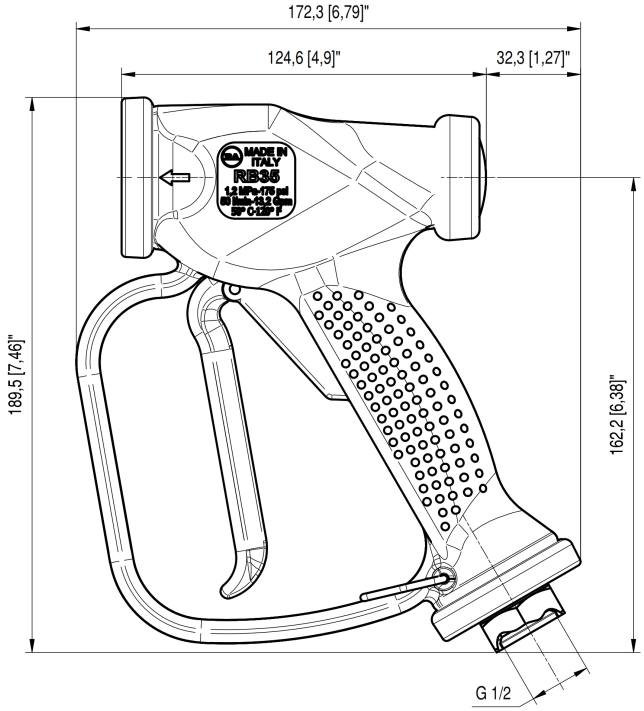

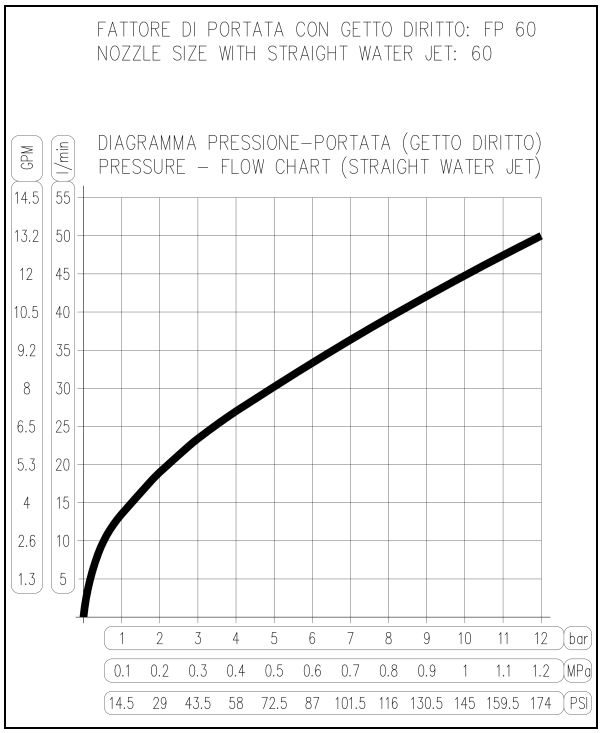

INSTRUCTIONS

This product is to be utilized with clean fresh water, even slightly additivated with normal detergents. For use involving different or corrosive liquids, contact the PA Technical Department. Appropriate filtration should be installed when using unclean liquids. Choose the gun in line with the working data of the machine where to be installed (system rated pressure, max flow and max temperature). In any case, the pressure of the machine should not exceed the permissible pressure imprinted on the gun.

FUNCTION

The gun opens and closes a duct in pressure by means of a shutter that operates on a seat in Viton or EPDM; recovery by a spring upon trigger release.

INSTALLATION

The gun can be used also with Hot water in compliance with the technical specs. In the system that generates hot water, it is adviseable to fit equipment that will limit accidental increase of the fluid temperature.

PROBLEMS AND SOLUTIONS

PROBLEMS	PROBABLE CAUSE	SOLUTIONS
Leakage from the nozzle	Presence of impurities between seat and shutter. Gun seat worn out	Clean Replace seat Fit adequate filters and/or check
Leaking seals	Seals worn out	Replace seals
Difficult trigger opening	Pressure too high inside circuit.	Control and adjust the pressure if necessary.

MAINTENANCE
STANDARD: every 400 working hours (circa 10,000 cycles), check and lubricate the seals with water resistant grease
SPECIAL: every 800 working hours (circa 20,000 cycles), check the wear of the seals and internal parts and if necessary, replace with original PA parts, taking care during installation to lubricate with water resistant grease.

Maintenance has to be carried out by specialized Technicians using only original PA spare parts.

The manufacturer is not to be considered responsabile for damage as a result from incorrect fitting and maintenance.

REGULATIONS
Read this manual before starting assembly
For a correct utilization, follow the directions described in this manual and re-print them on the Use and Maintenance manual of the machine. If needed, ask for the original Conformity Declaration for the accessory chosen.
The present manual is valid for all guns named **RB 35.**

Technical data, descriptions and illustrations are indicative and liable to modification without notice.

Instructions manual, maintenance, installation, spare parts. For a correct utilization, follow the directions described in this manual and re-print them on the Use and Maintenance manual of the machine.	n. 12.9141.50

30.6200.00 RB 35 -low pressure gun 50°C **30.6250.00 RB 35 -low pressure gun -80°C**

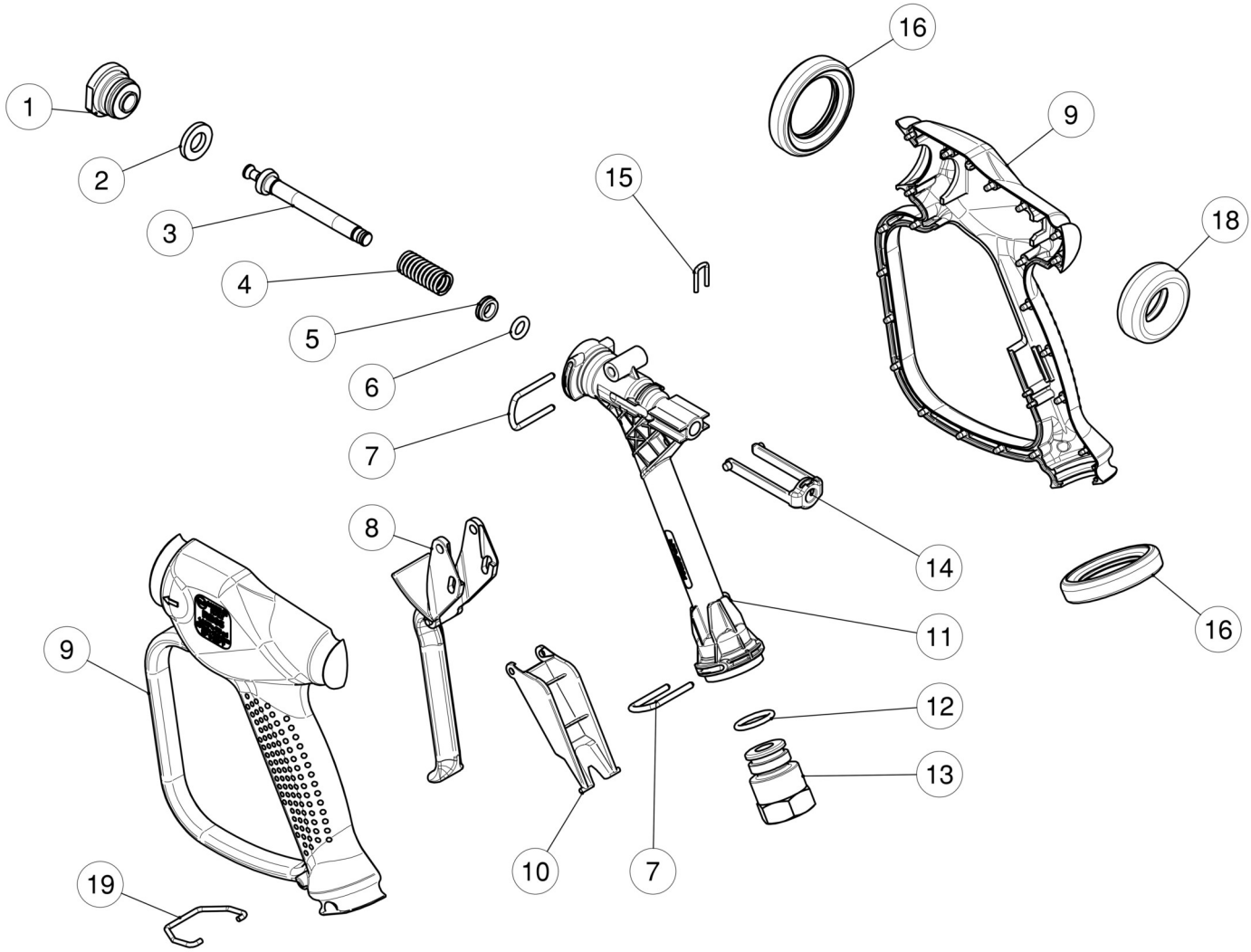

Pos.	P/N	Description	Q.ty	K1	K2	K3	K4	
1	30.6205.84R	Front nozzle -RB35, 50°C (1)	1					5
1	30.6255.84R	Front nozzle -RB35, 80°C (2)	1					5
2	30.6408.85R	Front seal, 11x20,5x3 mm FKM80 (1)	1					10
2	30.6207.85R	Front seal, 11x20,5x3 mm Epdm (2)	1					10
3	30.6211.31R	Piston -RB35, brass.-50°C (1)	1					5
3	30.6211.51R	Piston -RB35, aisi303 Sst.-80°C (2)	1					5
4	30.6410.51R	Spring, 1,8x12,8x40 mm Sst. (1)	1					10
4	30.6410.60R	Spring, 1,8x12,8x40 mm aisi316 Sst. (2)	1					5
5	30.6209.31R	Brass piston ring (1)	1					5
5	30.6209.51R	Sst seal piston ring (2)	1					5
6	10.3170.10R	O-ring, 2,62x7,6 mm Vi 70 (1)	1					10
6	10.3170.18R	O-ring, 2,62x7,6 mm Epdm (2)	1					10
7	30.6206.51R	U-bolt, Sst. d.3mm	1					10
8	30.6212.84R	Trigger -RB35, PA blue (1)	1					3
8	30.6254.84R	Trigger -RB35, PA grey (2)	1					3

(1) 30.6200.00 (2) 30.6250.00

Pos.	P/N	Description	Q.ty	K1	K2	K3	K4	
9	30.6219.24	Casing-kit -"50° C" RB35 (1)	1					1
9	30.6257.24	Casing-kit - "80° C" RB35 (2)	1					3
10	30.6213.84R	Lid, RB35 PA blue	1					3
11	30.6208.84R	Housing -RB35-50°C (1)	1					10
11	30.6252.84R	Housing -RB35-80°C (2)	1					10
12	10.3181.53R	O-ring, 2,62×17,2 mm (1)	1					10
12	10.3181.88R	O-Ring, 2,62x17,12 mm Epdm (2)	1					10
13	30.6214.31R	Coupl., -1/2F Bsp brass (1)	1					3
13	30.6214.51R	Coupl.,-1/2F Bsp aisi303 Sst. (2)	1					3
14	30.6210.84R	Connecting rod, blue	1					3
15	12.0050.27R	U-bolt, Sst. d.2mm	1					10
16	30.6203.85R	Front guard ring, blue	2					5
18	30.6204.85R	Back guard ring, blue	1					5
19	30.6415.51R	Trigger retainer, Sst.	1					5